WE PROVIDE CRYOGENIC
SOLUTIONS & EQUIPMENT

Zhongtai Cryogenic
中泰深冷

BRIEF INTRODUCTION:

Hangzhou Zhongtai Cryogenic Technology Corporation (hereafter called Zhongtai) is a subsidiary of Zhejiang Zhongtai Group.

Zhongtai specializes in the development, design, manufacture and service of cryogenic plants and equipment, including the engineering and fabrication of cryogenic equipment for the chemical and energy industries. The key products manufactured by Zhongtai are aluminum plate-fin heat exchangers, columns, vessels and cold boxes. In addition to BAHX, Zhongtai also manufactures coil-wound heat exchangers. Zhongtai has advanced design capability, first-class facilities and a world class ISO-9001 quality control system.

Zhongtai's manufacturing plants are sited on 143,000 M2 area. The two facilities have a total covered shop space of 100,000 M2, including the assembly workshops and dock. The Gaoqiao factory is used primarily for the manufacturing of non-ferrous metal production, with a covered shop area of 30,000 M2, mainly for the fabrication of aluminum plate-fin heat exchangers, aluminum and titanium vessels and aluminum high pressure columns. The Jiangnan factory main focus is ferrous metal production, such as stainless steel. Typical products manufactured in the Jiangnan facility are cryogenic steel columns, vessel and tanks, tubular heat exchangers, as well as the final assembly of very large packages or single components.

Zhongtai is devoted to realizing the demands of customers for industrial gas separation, purification and liquefaction by using advanced cryogenic technology.

As an advanced cryogenic plants and solution supplier, Zhongtai's products are widely used in the petrochemical industry, natural gas industry, as well as in the coal, chemical, and metallurgical industries. Zhongtai has design and manufacture licenses consisting of GB, ASME, PED and KGSC. Zhongtai products have been exported to 16 countries and/or by customers together with their plants.

Process Technology	
Liquefied natural gas plant	Helium extraction from natural gas
Synthetic ammonia liquid nitrogen washing	Coal bed gas liquefaction plant
Hydrogen-carbon monoxide separation plant	Helium liquefaction device
Oxygen, nitrogen liquefaction plant, air separation unit	Propane dehydrogenation (PDH) cryogenic
LNG, LAR extraction from syngas	Other specialty cryogenic applications

Key Products	
Ethylene cold box	Light hydrocarbon recovery cold box
Ethylene column overhead condenser	Advanced technology distillation column
Plate-fin in vessel for ethylene plant	Cryogenic vessels (aluminum and stainless steel)
Liquid nitrogen washing cold box	Aluminum plate fin heat exchanger (BAHX)
LNG cold box	Coil-wound heat exchanger
Methanol to Olefins (MTO) cold box	Propane dehydrogenation (PDH) cold box

WE SERVE:

Cryogenic separation, purification and liquefaction of industrial gases, petroleum refining, chemical industry, natural gas, coal bed gas, air separation, hydrogen and carbon monoxide industries.

WE SPECIALIZE IN:

Cryogenic + separation

OUR PRODUCTS:

LNG plants, modular and site built, synthetic ammonia liquid nitrogen washing columns or boxes, carbon monoxide-hydrogen cryogenic separation plant, syngas waste recovery, light hydrocarbon recovery, Propane dehydrogenation (PDH) cryogenic separation.

COLD BOXES:

Ethylene, LNG , Coal to Olefins (i.e. Methanol to Olefin) , Propane dehydrogenation (PDH), helium extraction and helium liquefaction, air separation, as well as plate-fin heat exchangers.

OUR BUSINESS:

Zhongtai specializes in cryogenic technology and provides engineered solutions to our clients. Our cryogenic technology consists of high-efficiency process equipment for liquefaction, purification and separation of industrial gases or hydrocarbons using heat transfer and/or mass transfer in cryogenic state Cryogenic equipment's is provided to the following industries: Power generation, chemical, metallurgy, LNG, and gas processing. Based on different applications and customer requirements, we supply professional service for customers like Engineering (PDP process package), key equipment supply only or full EPC general contract.

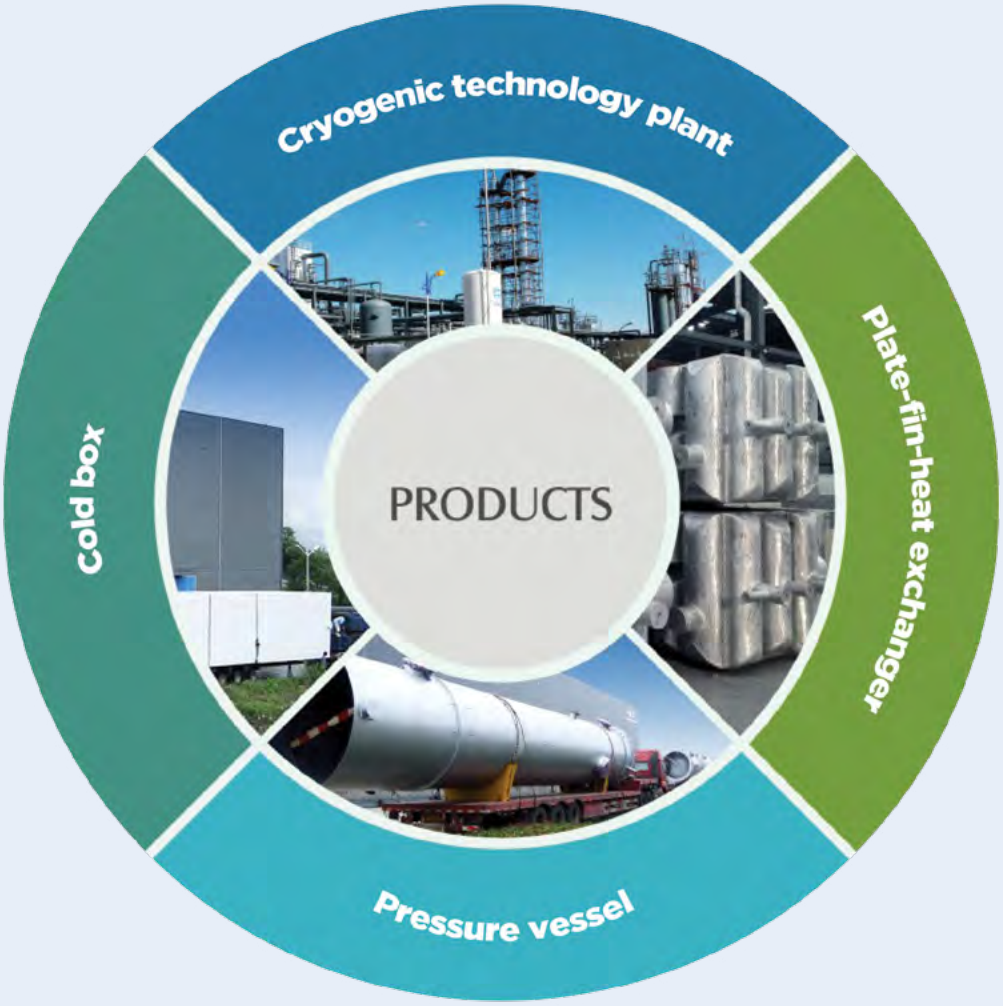

CRYOGENIC TECHNOLOGY PLANT

LNG PLANT (CRYOGENIC LIQUEFACTION)

Normally we liquefy gas by compression or cooling, yet the critical temperature for most of the gases is much lower than ambient temperature. Those gases cannot be liquefied through compression solely, thus cryogenic technology can be applied to cool the gas below its dew point temperature to create the liquid product. Liquefied gas can be transported and stored easily. Some of the liquefied gases like liquid helium and liquid hydrogen have special applications and require experience and expertise.

Typical Application and Product for Cryogenic Liquification Plant		
Process	Typical Application	Final Product
Natural gas liquefaction process	Condense natural gas to be liquid to produce LNG	LNG
Coke gas. Industrial exhaust liquefaction process	Coke oven gas and industrial exhaust (synthetic ammonia purge gas, etc) methanation and cryogenic liquefaction to make LNG.	LNG
Oxygen, nitrogen liquefaction process	Condense the surplus industrial gas from metallurgy, chemical industries to make liquefied gas for storage.	Liquid oxygen, liquid nitrogen
Hydrogen, helium liquefaction process	To liquefy hydrogen, helium. Liquid hydrogen to be used as fuel of satellites, rockets, hydrogen cars and liquid helium to be applied in superconducting and other sophisticated scientific and technological research.	Liquid hydrogen, liquid helium
Natural gas dehydrogenation process	Small amounts of nitrogen components in the exploited natural gas shall be removed using dehydrogenation process.	Natural gas

Zhongtai is one the few suppliers in China who have the technology to supply both LNG cold boxes and complete LNG plants. Zhongtai has substantial experience in the clean energy processing such as natural gas liquefaction, coal bed gas liquefaction and light hydrocarbon recovery. Zhongtai has provided more than 100 cold boxes or plate-fin heat exchanger cores for the Chinese domestic natural gas market. We are now EPC constructing several LNG plants with plant size 30×104Nm×/d and 50×104Sm×/d. Zhongtai has delivered plate-fin heat exchangers and cold boxes based on ASME Code to the U.S. with application, such as natural gas processing and nitrogen rejection.

Zhongtai's LNG plant has a size series of 5×104Nm×/d, 10×104Nm×/d, 30×104Nm×/d, 50×104Nm×/d, 100×104Nm×/d, 200×104Nm×/d

and 300×104Nm×/d. Based on the natural gas condition and energy consumption, etc., different processes could apply like mixed refrigerant cycle (MRC) process (pre-cooling can be an option), cascade process, nitrogen expansion and pre-cooling nitrogen and methane expansion, etc.

CRYOGENIC TECHNOLOGY PLANT

SYSTEM COMPOSITION OF LNG PLANT

FEED GAS DEACIDIFICATION SYSTEM:

Feed gas deacidification system: based on the condition of feed gas, this process uses a composite amine solution as an absorber, and process of one section absorption and one section regeneration to remove the acid gas from the feed gas mixture.

FEED GAS MERCURY REMOVAL AND DESULFURATION SYSTEM:

Feed gas mercury removal and desulfuration system: two towers are connected in series or in parallel, which not only improves the utilization for absorbents, but also in case of sharp fluctuation of sulfur compounds or mercury in the feed gas, absorbents can be replaced without shutdown of plant. Two sets of mercury removal devices will be reversed every six months. Sampling points are set at the outlet of the absorption tower for regular analysis of sulfur compounds and mercury in the purified feed gas.

FEED GAS DEHYDRATION AND HEAVY HYDROCARBON REMOVAL SYSTEM:

Feed gas dehydration and heavy hydrocarbon removal system: The dehydration unit uses isobaric dry purification process. The feed gas for regeneration is the process natural gas. The unit is closed-circuit circulating, with great flexibility and ease of operation. The dehydration and benzene removal purification unit uses tri-tower PTSA process, which is based on the

used absorbents of different absorbing capacity and selective absorption under different pressure and temperature, removal of impurities such as heavy hydrocarbon from the process gas. The unique combination of the dehydration and purification process is safe and stable, with minimal regeneration gas.

SEWAGE TREATMENT SYSTEM:

Sewage treatment system: Zhongtai's LNG plant is equipped with a sewage treatment system, utilizing absorption to treat the sewage generated from process to reach Grade 2

emission standard requested by state environmental protection requirements.

LIQUEFACTION SYSTEM:

Liquefaction system: uses MRC process technology, which is based on the heat transfer calculation of cold box key equipment — plate-fin heat exchanger, and successfully developed two-phase flow technology.

Zhongtai can, to the greatest extent, do skid design for LNG plants with size 30×104Nm×/d or less, especially for the three units of purification system, cold box and refrigerant compressor, which in turn can control the quality effectively and reduce the installation period at a job site.

CRYOGENIC PURIFICATION (LIQUID NITROGEN WASHING DEVICE):

Typical Application and Product for Cryogenic Purification Plant		
Process	Typical Application	Final Product
Liquid nitrogen washing process	Ammonia is synthesized by pure hydrogen, nitrogen by a ratio of 3:1. After rectisol process, the synthetic gas still contains traces of carbon monoxide and argon, etc., which shall be removed through liquid nitrogen washing process	Exquisite gas
Rectisol process	In industries such as ammonia and methanol, synthetic gas contains components like sulfide and carbon dioxide, which shall be removed through rectisol process	Purified gas
LNG and LAR recovery from synthetic ammonia exhaust	Using cryogenic method to recover argon and methane from ammonia gas relief, thus provide economic benefits	LNG and liquid argon
LNG produced from coal chemical syngas	Cryogenic separation of H2, CH4 from coal gasification syngas to get liquid methane (LNG)	LNG
Conventional ammonia plant reconstruction using cryogenic CO removal process	By using cryogenic technology to remove CO, cold from expander. The process is environmental protective and energy saving	H2

Application of liquid nitrogen washing process: the feed gas of synthetic ammonia contains nitrogen, as well as impurities like carbon and oxygen compounds (such as carbon monoxide, carbon dioxide, etc.), argon and sulfides, which could not satisfy the requirements of the subsequent process. Normally the rectisol plus liquid nitrogen washing process would be used to remove these impurities. The liquid nitrogen washing process is a cryogenic purification method, using cryogenic distillation to obtain high purity hydrogen, then hydrogen and nitrogen are mixed at a ratio of 3:1 to be used for ammonia synthesizing. The output from cryogenic liquid nitrogen wash device has carbon monoxide content less than 2 ppm, which effectively improves the efficiency of the synthetic ammonia catalyst, reduces the synthesis pressure, eliminates relief gas, so as to achieve the effect of energy saving and long period operation, low emissions.

Reference List for Synthetic Ammonia Liquid Nitrogen Washing Device				
No.	Client	Size of Plant	Design Pres-sure (Mpa.)	Job Site
1	Shandong Yankuang Group	500kt/a synthetic ammonia with 800kt/a urea	3.7	Kaiyang, Guizhou
2	Hangzhou Jinjiang Group	400kt/a synthetic ammonia with 700kt/a urea	6.5	Kuitin, Xinjiang
3	Inner Mongolia Tianrun Group	300kt/a synthetic ammonia with 520kt/a urea	6.5	Inner Mongolia
4	Shanxi Xingmao Group	300kt/a synthetic ammonia with 520kt/a urea, 200kt/a methanol	6.5	Fugu Shanxi
5	Datang Hulunbei ' er Fertilizer	180kt/a synthetic ammonia with 300kt/a urea	3.7	Haila 'er, inner Mongolia
6	Anhui Jinmei Zhongneng Chemical	200kt/a synthetic ammonia with 320kt/a urea	3.5	Linquan, Anhui
7	Ningxia Jiemei Chemical	400kt/a synthetic ammonia with 700kt/a urea, 200kt/a methanol	6.5	Yinchuan, Ningxia
8	Henan XLX Fertilizer	500kt/a synthetic ammonia with 800kt/a urea	6.5	Xianxing, Henan
9	Henan Jimei Chemical	300kt/a synthetic ammonia with 520kt/a urea, 500 million m× natu-ral gas	3.7	Qinyang, Henan
10	Anhui Haoyuan Chemical Group	180kt/a synthetic ammonia with 300kt/a urea	4.0	Fuyang, Anhui
11	Xinjiang XLX Energy & Chemical	300kt/a synthetic ammonia with 520kt/a urea	5.8	Xinjiang
12	Anhui Haoyuan Chemical Group	200kt/a synthetic ammonia project	4	Fuyang, Anhui
13	Cangzhou Zhengyuan Fertilizer	600kt/a synthetic ammonia project with 800kt/a urea	4.5	Cangzhou, Hebei
14	CNSIC Kunshan	600kt/a soda ash with 300kt/a synthetic ammonia	6.4	Jiangsu

CRYOGENIC TECHNOLOGY PLANT

CRYOGENIC SEPARATION (ASU, CO-H2, PDH):

Gas is typically a mixture of natural or synthetic form. Each component in the mixture has its own end use. Cryogenic separation, based on the boiling point temperature difference of each component in a gas, through the application of heat and mass transfer using heat exchangers and cryogenic columns, results in different pure components in order to meet the needs of industrial and medical industries need for oxygen, argon, nitrogen and other air products.

Typical Application and Product for Cryogenic Separation Plant		
Process	Typical Application	Final Product
Air separation process	Separate oxygen, nitrogen, argon and other components from air	Oxygen, nitrogen and argon, etc.
Olefin separation process	Separate olefin mixture which produced from Pyrolysis - gas gasification, PDH and MTO process	Ethylene, propylene, etc.
Carbon monoxide Hydrogen process	Separate hydrogen and carbon monoxide	Hydrogen, carbon monoxide

CRYOGENIC SEPARATION (ASU, CO-H2, PDH):

1. Standard air separation unit (products are gaseous oxygen, nitrogen, argon etc.)
2. Liquid air separation unit (products are liquid oxygen, nitrogen, argon)
3. Oxygen and nitrogen liquefaction plant

TYPICAL AIR SEPARATION UNIT PFD

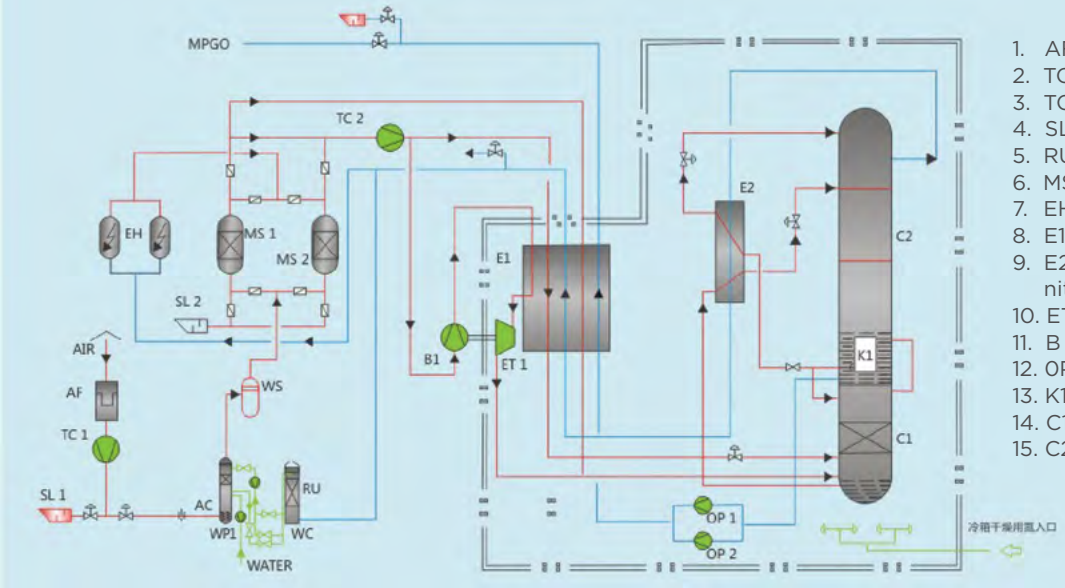

1. AF - air filter
2. TC1 - air compressor
3. TC2 - circulating compressor
4. SL - muffler
5. RU - Air pre-cooling system
6. MS - molecular sieve purifier
7. EH - Electric heater
8. E1 - Main heat exchanger
9. E2 - Liquid oxygen and nitrogen sub-cooler
10. ET - Turbo expander
11. B - Supercharger
12. OP - Liquid oxygen pump
13. K1 -×Vaporizer
14. C1 - Lower column
15. C2 - Upper column

TYPICAL PROPANE DEHYDROGENATION (PDH) PFD

16. E-101 - Cold feed exchanger
17. E-102 - Net gas chiller
18. E-103 - Feed chiller
19. V-101 - High pressure separator
20. V-102 - Medium pressure separator
21. V-103×- Low pressure separator
22. V-104 - Net gas Net gas separator
23. V-105 - Flash drum
24. Et-101—Et-102 - ××××××Permeable expander
25 P-101 -Pump

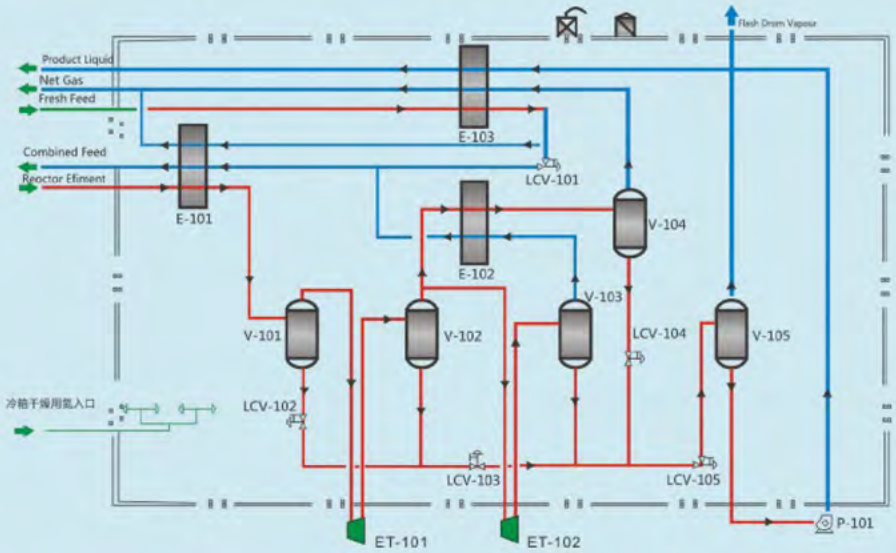

TYPICAL HYDROGEN-CO SEPARATION PFD

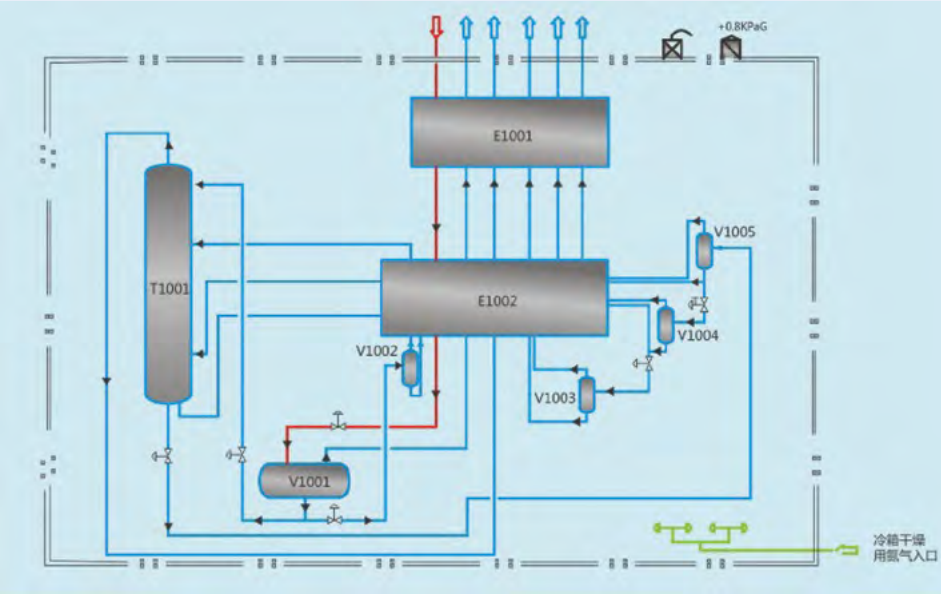

TH1001-CO/H2 - Separation column

E1001 - Plate-fin heat exchanger

E1002 - Plate-fin heat exchanger

V1001 - Hydrogen separation tank

COLD BOX

LNG COLD BOX

The LNG cold box is applied in a natural gas liquefaction plant to liquefy and purify natural gas. If the nitrogen content in natural gas is too high, a nitrogen removal column shall be set to purify natural gas and to meet the requirement of LNG code combustion value.

Zhongtai has a two phase flow patent for LNG cold box, as well as know-how for heavy hydrocarbon removal, mercury removal and mercury resistance. Zhongtai has more than 20 cold box patents

Zhongtai has built more than 70 sets of LNG cold boxes. In Petro-china Hubei Wuhan 500×104Nm×/d LNG project, Zhongtai a used unique design of PFV for the vaporizer. With compact and reliable heat transfer, the product is in a cylinder shape. Innovative technological advances and high quality manufacturing keep Zhongtai on the leading-edge through continuous improvements.

COLD BOX

Liquid nitrogen washing cold box is used in the purification of nitrogen for the fertilizer industry. Zhongtai has mature technology for design, manufacturing and installation of liquid nitrogen washing cold boxes, and has delivered cold boxes for synthetic ammonia plants with sizes ranging from 18x104 ton/year to 60x104 ton/year.

LIQUID NITROGEN WASHING COLD BOX:

COLD BOX

NATURAL GAS LIQUID RECOVERY COLD BOX:

COLD BOX

ETHYLENE COLUMN OVERHEAD CONDENSER / PLATE-FIN IN VESSEL

In ethylene plants and other chemical plants, there are many columns, for example, stripper columns and distillation columns. Zhongtai has provided heat transfer and mass such as a condenser in the top of the column which provides a return flow liquid down and at the bottom of columns a reboiler to provide upward gas. In many columns, a boiler in the middle of the column is utilized.

Zhongtai's column overhead condenser uses a structure with plate-fin heat exchanger inside a stainless steel cylinder, to be called PFV (plate-fin in vessel). The gas (warm stream) enters heat exchanger through nozzle and inlet header, and transfers heat with the cold stream, to be cooled and condensed and enters the vapor-liquid two-phase, then goes out of column overhead condenser through outlet headers and nozzles. The vapor-liquid two-phase stream enters a separator to separate vapor and liquid. Liquid in the return flow goes back to the column top and vapor goes out of the top of separator to be sent to the next unit. Refrigerant is pumped into the vessel and the plate-fin heat exchanger is submerged wholly or partially inside the refrigerant.

PFV units utilize a built-in type thermosiphon heat exchange regime and can be placed vertically, as well as horizontally. PFV technology takes full advantage of the plate-fin heat exchanger's features of efficiency and compactness. It is widely applied in clean and low-temperature/medium heat transfer case in the petrochemical industry, which can greatly decrease the size and weight of equipment and result in energy savings under small temperature differences.

PFV is a typical example that plate-fin heat exchanger replaces shell-tube heat exchanger.

The overhead condenser created by Zhongtai and supplied for Huajin Chemical 460kt/y ethylene plant is a typical vertical PFV. The 2nd demethanizing column condenser we supplied for Petro-China Liaoyang Petrochemical is a typical horizontal PFV. The PFV is also operating well in Petro-China Lanzhou Petri-chemical's plant. The refrigerant vaporizer for Petro-China Hubei 500*104Nm3/d LNG plant is currently under fabrication.

COLD BOX

ASU COLD BOX

COLD BOX

PROPANE DEHYDROGENATION PROPYLENE (PDH) COLD BOX:

Propane dehydrogenation (PDH) is a strong heat absorption process, which can produce a high propylene yield under high temperatures and relatively low pressure. Currently there are several widely accepted processes like the Oleflex process from UOP, the Catofin process from Lummus-Houdry and the STAR process from Krupp Uhde GmBh, which have all been commercialized. Often propylene and ethylene are used in the propane dehydrogenation (PDH) process to result in gradual cooling and separate olefins. In the low temperature section, Zhongtai has applied its multi- stream cold box.

COLD BOX

METHANOL TO OLEFINS TECHNOLOGY: VESSEL

MTO (Methanol to Olefins×and MTP (Methanol to Propylene) are two new important processes for the methane chemical industry. In this chemical technology, methanol is synthesized from coal or natural gas as raw material with a fluidized bed reaction which is similar to catalytic cracking unit, producing low carbon olefins. The cryogenic separation section of olefin separation uses a multi - stream cold box.

COLD BOX

CARBON MONOXIDE COLD BOX:

Carbon monoxide is an important chemical raw material which can be used for the synthesis of a variety of high value added products, such as acetic acid, acetic anhydride, formic acid, dimethyl formamide, light gas and metal carbonyl compounds, etc.

To get high purity carbon monoxide an acryogenic separation process may be used. Cryogenic separation is used to separate various components based on their different boiling points. Because of the different components of carbon monoxide, we use different combinations to create separation and purification.

HEAT EXCHANGER

PLATE-FIN HEAT EXCHANGER:

Aluminum plate-fin heat exchangers (BAHX) are highly efficient and compact in cryogenic heat exchange equipment, with the characteristics of complicated design theory, high fin molding precision. They are brazed to be a single block at one time and are well-suited to applications that have multi-stream or state changes during heat transfer. It is possible to have over twelve process streams at various pressures from minimum to maximum, in a single heat exchanger.

Most brazed aluminum plate-fin heat exchangers have been installed in process plants used to separate a feed gas into its constituents. For example, through the partial liquefaction of the feed and subsequent distillation and separation. The products and waste streams are then re-warmed against the feed streams. Condensers and reboilers are associated with distillation columns. Often, chillers using standard refrigerants are used. Brazed aluminum plate-fin heat exchangers are well-suited for these and many other services.

The major applications of brazed aluminum plate-fin heat exchangers have been in the cryogenic separation and liquefaction of air (ASU); Natural Gas Processing (NGP) and Liquefaction (LNG); the production of petrochemicals and treatment of offgases; large refrigeration systems. For an example of typical application refer to the following table:

Plant Types	Products & Fluids	Typical Temperature Range, ×	Typical Pressure Range, bar.a
Industrial Gas Production - Air Separation - Liquefaction	Oxygen, Nitrogen, Argon, Rare Gases, Carbon Dioxide	+65××-200×	1×100bar(a)
Natural Gas Processing (NGP)× - Expander Type -Nitrogen Rejection Unit (NRU) -Liquefied Petroleum Gas (LPG) -Helium Recovery	Methane Ethane, Propane, Butane, Pentane, Nitrogen Helium, Hydrogen, Hexane, Carbon Dioxide	+100××-130×	15-100
Liquefied Natural Gas (LNG)× - Base Load - Peakshaver	Liquefied Natural Gas, Multi-Component, Refrigerants	+65××-200×	5-100
Petrochemical Production - Ethylene - MTBE - Ammonia -Refinery Off-Gas Purification	Ethylene, Propylene, Ethane, Propane, MTBE, Ammonia, Carbon Monoxide, Hydrogen	+200××-200×	1-100
Refrigeration Systems - Cascade Cooling -Liquefaction	Helium, Freon, Ethylene, Propane, Propylene, Nitrogen, Hydrogen , Multi-Component , Refrigerants	+100××-269×	15-45

HEAT EXCHANGER

PLATE-FIN HEAT EXCHANGER:

After connection with the pipe line, heat exchangers (cold box) carry out a pressure strength test in accordance with the governing code. It is highly recommended that a pressure test is NOT conducted with water as the test medium for the heat exchanger has a complicated internal structure and water removal after the heat exchanger is installed is difficult. The residual water trapped within the heat exchanger can freeze during unit operation under causing serious damage and can lead to premature failure of the heat exchanger. When a pneumatic strength test is adopted, dry nitrogen should be used as the test medium.

Zhongtai is at the forefront of the industry for plate-fin heat exchanger design and manufacture, especially for high pressure, phase transition and multi-stream cores. Zhongtai's design always brings customers a minimum total investment for plate-fin heat exchanger. At the moment, the highest design pressure of Zhongtai's plate-fin heat exchanger is 9.28MPa, the biggest single core size is 1.3*1.3*8.5m and main heat exchangers are applied for the biggest ASU 6 trains of 820,000Nm3/h. Zhongtai's plate-fin heat exchangers, based on ASME code and PED, have been exported to 16 countries including USA, Russia, and various markets throughout Europe and India, etc.

WASH

PRESSURE VESSEL:

Hangzhou Zhongtai Cryogenic Technology Corporation has the Chinese A2 Pressure Vessel Design and Manufacture License, as well as ASME U Stamp License and Korean Gas Safety KGS Certification. The pressure vessel designed and manufactured by Zhongtai has been widely used in the petrochemical, coal chemical and metallurgy industries, especially for cryogenic application. Zhongtai has the ability to design and manufacture pressure vessels made of aluminum, stainless steel, cryogenic steel and carbon steel. Reference projects include cryogenic high pressure columns with wall thickness of 80mm and absorber with big pressure differences and big temperature difference for hydrogen service, both of which are first domestic. The following table shows the pressure vessels we delivered:

No.	Plant type	Vessel name
1	LNG plant	Regeneration column, absorption column, molecular sieve absorber, buffer tank, compressor interstage separator, compressor interstage cooler and regeneration gas heater, etc.
2	Liquid nitrogen wash device	Cryogenic nitrogen washing column, molecular sieve absorber, regeneration gas heater, regeneration gas cooler, flare gas buffer tank and flare gas heater, etc.
3	Ethylene plant	Reboilers with PFV (plate-fin in vessel) technology, ethylene column overhead condenser and a variety of separators.
4	Air separation unit	Air cooling tower, water cooling tower, purifier, cryogenic storage tank and rectifying tower, etc.
5		Spiral wound heat exchanger

WASH

PRESSURE VESSEL:

Zhongtai is located near the Fuchunjiang River, with convenient road transportation and products that can be shipped to the Shanghai port and Ningbo port through inland river transportation.

Zhongtai takes on challenging projects that requires high reliability and large size columns, vessels and heat exchangers. Our experience in cryogenic vessels, large size cryogenic storage tanks and cryogenic columns is used in both the chemical and energy industries. Our mission is to satisfy the demands of our clients by providing high-technology and high-quality products.

Zhongtai Cryogenic
中泰深冷

DETAILS DETERMINE QUALITY.

BE DEVOTED, CONCENTRATED AND PROFESSIONAL IN CRYOGENIC TECHNOLOGY.

Hangzhou Zhongtai Technology Corporation

No. 228 Golf Road, Dongzhou District, Fuyang City, Hangzhou, P.R. China

PC: 311402

Tel: (86) 571-63415978, 113605802009

Fax:(86) 571-63417776

E-mail: hzpec@zhongtaichina.com

www.zhongtaihangzhou.com

In North America contact:

BAHX, LLC

6715 Theall

Houston, TX 77066

Tel: (281) 440-7350

www.CryoCore-USA.com